NASTEC

> we move it faster >

4HS Submersible Pumps

Installation and Operating Manual

man4HS_06_eng.docx LCD 2.24 INV 2.2 H 2.1

Index

1. Introduction of the 4HS submersible pumps range

4HS is a 4” high speed centrifugal submersible pump for clean water composed by:

- high speed three phase asynchronous motor with wet rotor and canned type resin filled stator.
- Built-in inverter on board driven by a dedicated control module (CM) positioned outside the well.
- High speed multi stage pump entirely made of AISI 304 stainless steel.

Pump driving made by inverter allows:

- Modify the pump speed to grant constant the desired pressure regardless water request. In this way the pump is operated only and when needed thus avoiding unnecessary waste of energy and granting longer system life.
- implement the soft start and the soft stop to increase the system life and reducing the current peaks.
- protect the motor from overloading and dry running , overvoltage, undervoltage and possible abnormal conditions

4HS is used on residential and industrial sectors for water pressurized systems, granting:

- Energy saving
- Simplified and quick installation
- Long life reliability

4HS: submersible pump

CM: control module

2. Safety Instructions

NASTEC strongly suggests to reading carefully this operation manual before using and installing its products
Any operation (installation, maintenance and repair) must be carried out by trained, skilled and qualified personnel.
Failure to observe and follow the instruction of this manual may result fatal in dangerous electric shock.

 	**The unit must be connected to the power supply by a switch granting the complete visual disconnection (separation) from the line before any operation on the 4HS itself and on the connected load.** **Disconnect the unit from the power supply before any operation.** **Do not remove for any reason, the cover of the CM and the cable guard without having visually disconnected the unit from the power supply and having waited at least 5 minutes.** **4HS and pump system must be grounded properly before operation.** **For the entire period the CM is powered a high voltage is present on the output terminals independently if it is running or not the pump.** **Do not start the pump for any reason if not completely immersed in water.**

Avoid any shock or serious impact during transportation.
Check the 4HS immediately upon delivery and check for damage and/or missing parts. In either case, immediately notify the supplier.
Damages due to transportation, incorrect installation, or improper use of the device will null and void the warranty.
NASTEC cannot be held responsible for any damage to people and/or property due to improper use of its products.

3. Stocking conditions

Store the product on its packaging in a dry and well ventilated environment within a temperature range from -20 ° C and 70 ° C.
If the pump remains in stock for more than a year is recommended to disassemble the rotating parts and test their functionality. It 'also need to power the electric pump (without running the motor) to allow charging of electrolytic capacitors of the inverter module.
If the pump has already been put into operation and is then placed in storage, the minimum storage temperature is 4 ° C. Alternatively you need to add anti-freeze fluid.

4. Packing content

Packing includes:

- 4HS submersible pump with 2,5 meters flat cable length.
- CM (control module)
- Pressure transducer
- Operating Manual
- Cable junction kit

	Check the 4HS packing immediately upon delivery and check for damage and/or missing parts; in either cases immediately notify the supplier

5. General technical features

PUMP	
Max. temperature of pumped liquid	35 °C (92 °F)
Min. speed of water flow on motor case	0.2 m/s
Characteristics of pumped liquid	clean, non-corrosive, non-explosive, free of particles and fibers, with a maximum sand content of 50 g/m^3
Grade of protection	IP68
Used Materials	Impellers and diffusers in AISI 304 stainless steel
Cable	Flat cable ACS – WRAS
CM	
Max. temperatura dell' ambiente d' installazione	60 °C (140 °F)
Grade of protection	IP55 (NEMA 4)
Used Materials	Aluminium , LCD membrane with PVC stickers, antipull plug in polyamide
Analog input	2 x analog input 4-20 mA + 2 settable analog input 4-20 mA or 0-10 V .
Digital input	4 inputs, N.O or N.C settable via software
Digital output	2 output relays 5 A , 250 Vac, N.O. or N.C settable
Auxiliary feeding	24 Vdc (300 mA),10 Vdc (5 mA)
Day and time indication	dater with lithium backup battery (unavailable)
User display	Backlit LCD display with 16 characters x 2 rows , 5 buttons, buzzer for acoustic
Short circuit protection	With fuse (25 Amp)

CERTIFICATIONS
CE

6. Pump installation

	**Entire installation procedure must be performed verifying that pump is not connected to the mains.**

Pump can be installed both vertically and horizontally, but the outlet should never be below the horizontal line.

If the pump is not installed in a well, to grant a proper cooling, a cooling sleeve must be used; doing so the minimum speed of the pumped liquid has to be granted.

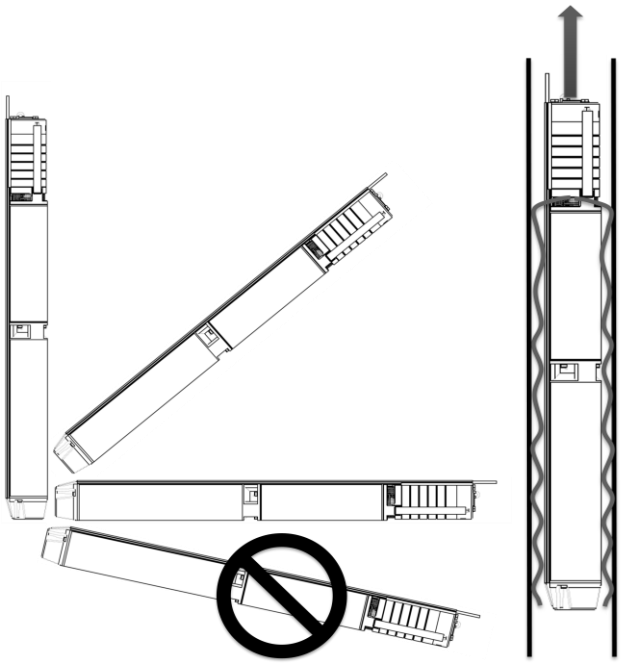

6.1 Installing pump in the well

To reduce noise transmission it is advised to use plastic pipes.
The pump must always be secured in the well through a special rope attached to loop on the pump head.
It is recommended not to drop the pump in the well by using the electric cable, its integrity must be preserved in all operations. In this regard it is recommended to fix the cable on cable support or on the pipe.
During operation the pump suction must always remains at least 1.5 meters below the dynamic water level.

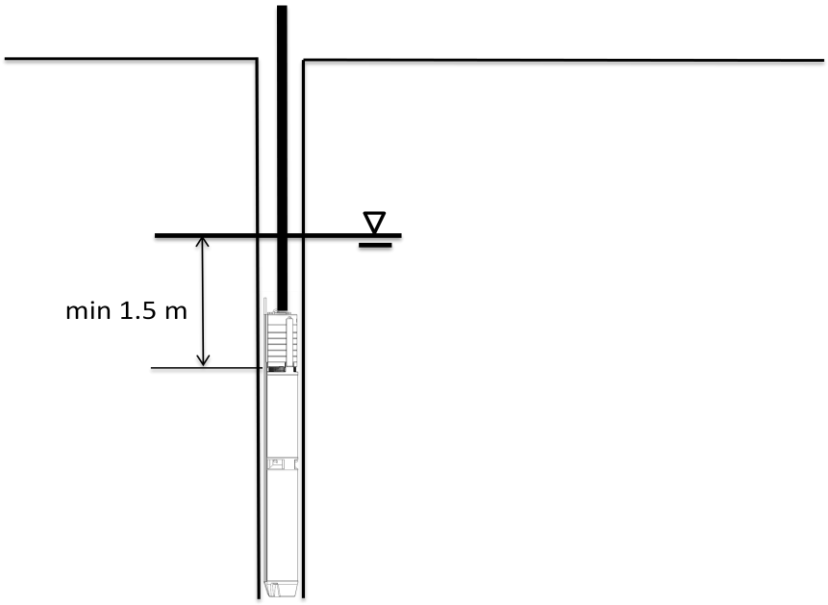

	**Do not drop the pump in the well by using the electric cable** **Make sure about the electric cable integrity during all the operations.** **Ensure the pump in the well with a stainless steel rope to be fixed to the hole in the pump head**

6.2 Pump cable

4HS are equipped, in their standard configuration, with 5 meter flat cable length.

SINGLE PHASE INPUT POWER

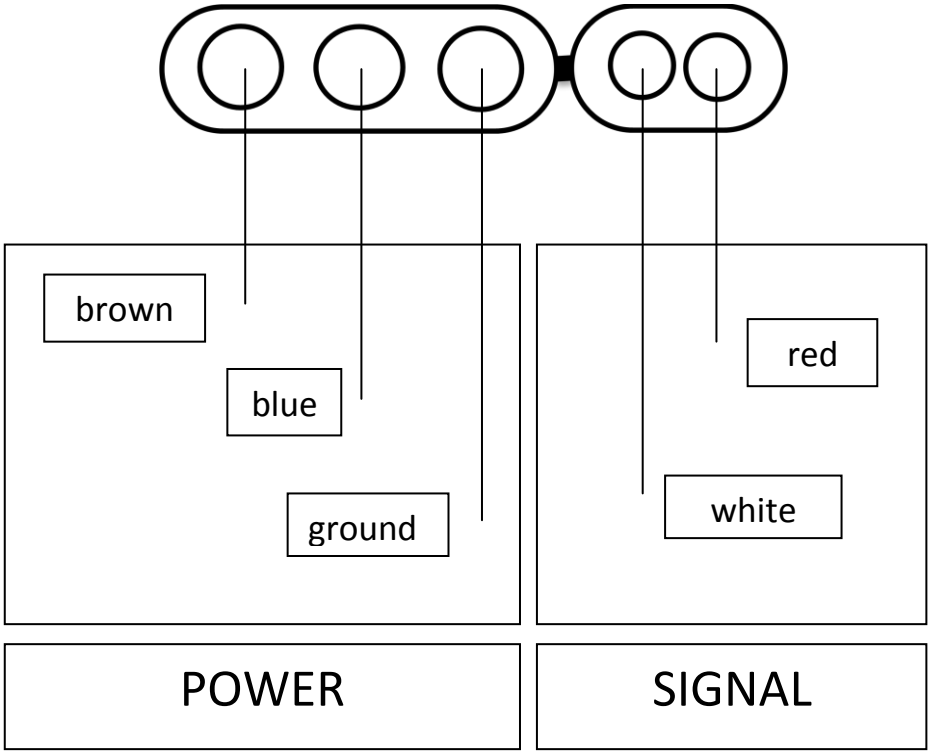

If the distance between the pump and the CM is longer than the supplied cable it is necessary to make a junction performed by the special kit supplied as standard.
The cable section for additional power conductors must be calculated considering the maximum allowed voltage drop.

4HS model	type of wire	total cable length			
		10 – 50 m	50 – 100 m	100 – 150 m	150 – 200 m
4HS 02/04 4HS 04/03 4HS 06/02	power	2,5 mm2 (AWG 13)	4mm2 (AWG 11)	6 mm2 (AWG 9)	10 mm2 (AWG 7)
	signal	1 mm2 (AWG 17)		1,5 mm2 (AWG 15)	
4HS 02/08 4HS 04/05 4HS 06/04	power	4 mm2 (AWG 11)	6mm2 (AWG 9)	10 mm2 (AWG 7)	16 mm2 (AWG 5)
	signal	1 mm2 (AWG 17)		1,5 mm2 (AWG 15)	

 	**To make the junction is necessary to follow carefully the instructions inside the kit.** **At the time of joining and electrical connection is essential to maintain the correspondence between the signal cables.** **After cable joining and placed the pump in the well you must perform, before connecting to the CM, a test of insulation: join together the two power cables and, applying a voltage of 500V, an insulation resistance from the ground higher than 100 Mohm must be verified. Join together the two signal cables and, applying a voltage of 500V, an insulation resistance from the ground higher than 100 Mohm must be verified.**

7 CM installation

The CM can be easily fixed to the wall using 2 screws through the holes shown in Figure 2.

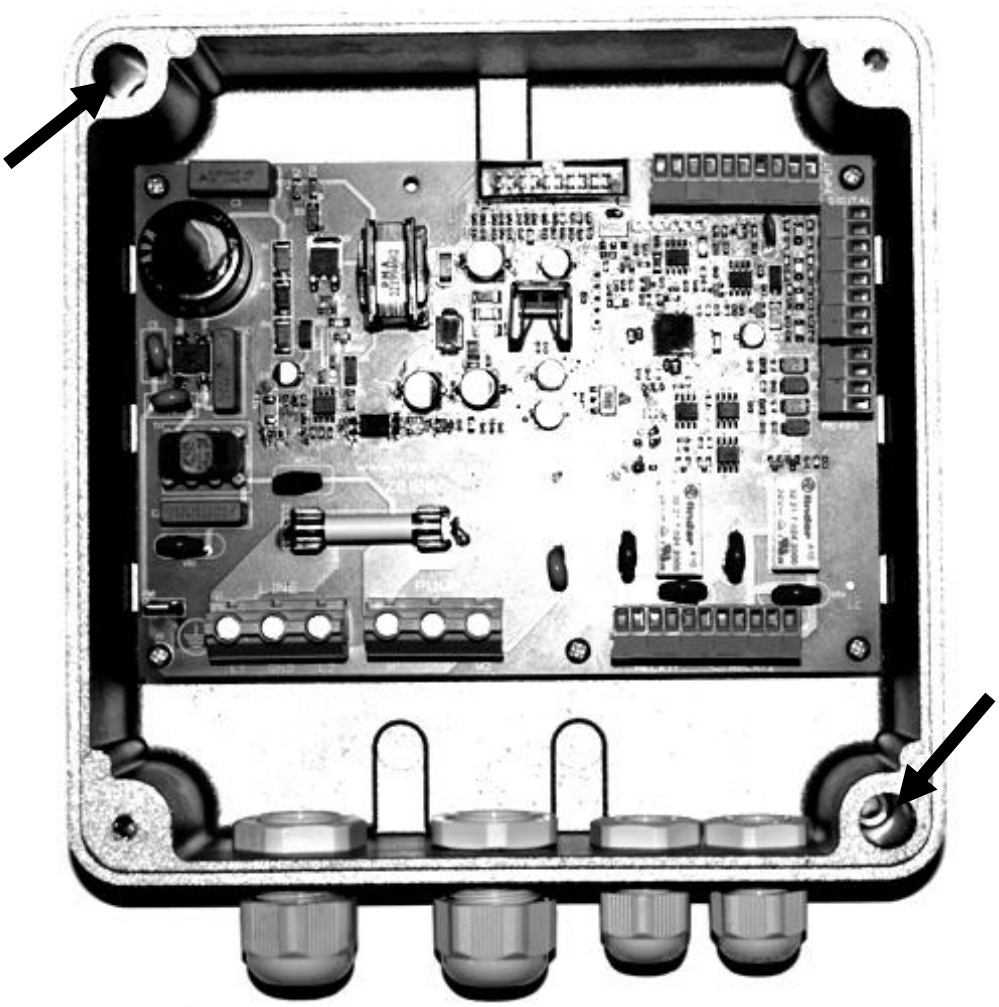

Then using the special inserts thus cover can be fixed firmly.

The IP55 protection degree enables the CM installation even in humid and dusty environments. However it is recommended to protect the CM from the direct exposure to weather and sunlight.

7.1 Electric wiring

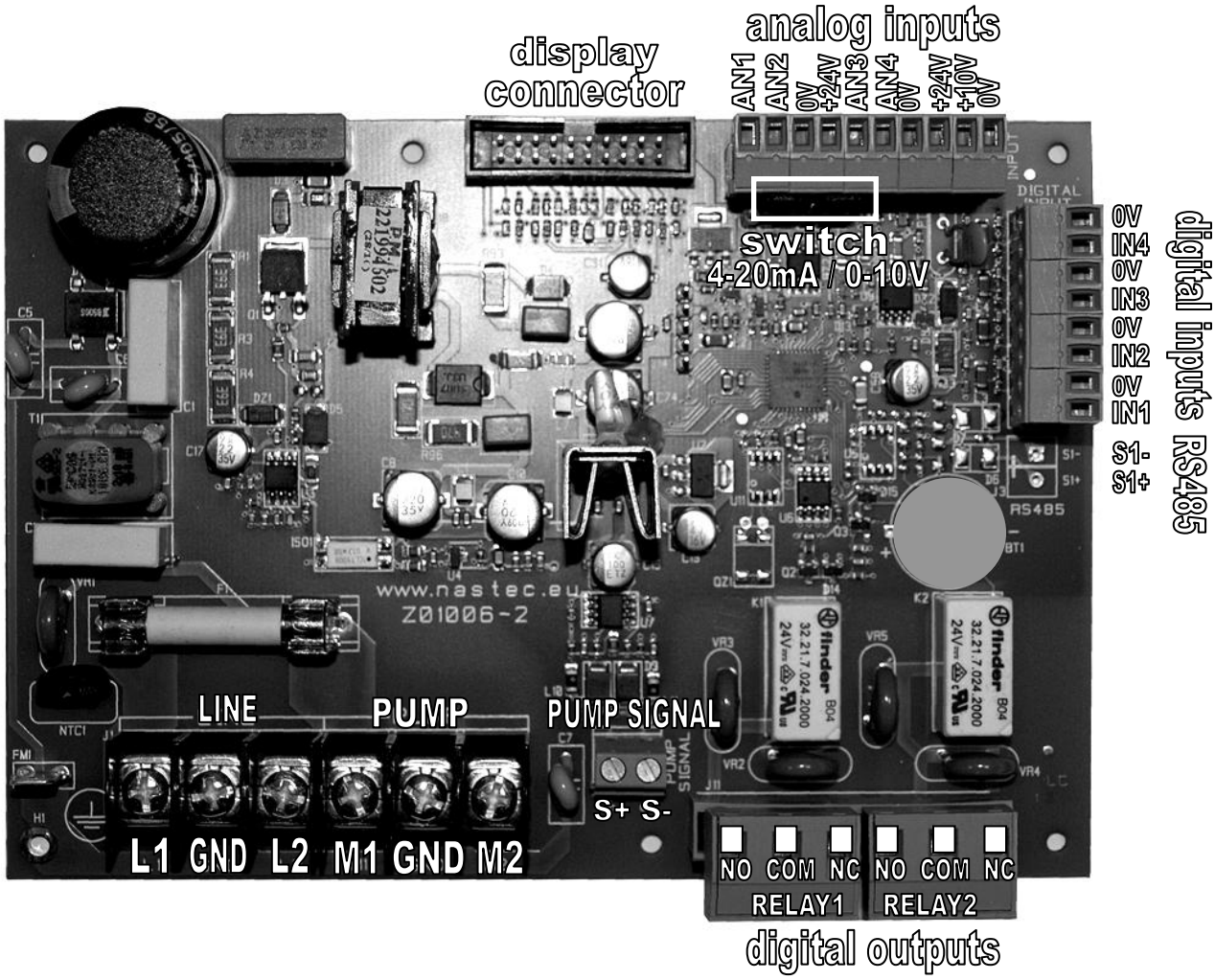

Input power line (LINE):	Output power line (PUMP):		Pump signal:
• **L1,L2 power line** • **GND ground**	• **M1,M2 terminals** • **GND ground**		• **S+ (red)** • **S- (white)**
Analog inputs: • AN1 (4-20 mA or 0-10 V) • AN2 (4-20 mA or 0-10 V) • 0V • +24V • AN3 (4-20 mA) • AN4 (4-20 mA) • 0V • +24V • 10V • 0V AN1 o AN2 terminals can be set as voltage input (V) or current input (I) through J5 e J9 selector.	Digital inputs: • IN1 • 0V • IN2 • 0V • IN3 • 0V • IN4 • 0V	Communication auxiliary (RS485): • S1+ • S1-	Digital outputs (relays): • RELAY1: pump run signal NO: normally opened COM: common NC: normally closed • RELAY2: alarm signal NO: normally opened COM: common NC: normally closed **Relays of digital outputs are free contacts relays (no voltage) Max voltage is 250 V AC and max current is 5 A.**

	**Read carefully the Guidelines for safety before installing the device.** **At the end of the installation check that no other objects are inside the CM or deposited on the electronic board.** **It is recommended to tighten all 4 screws with washers of the cover before powering the device. Otherwise, you may fail to connect to ground the cover with a risk of electric shock or even death.**

8. 4HS pumps installation for constant pressure mode

CM can manage the rotation speed of pump to maintain constant the pressure in a point of plant regardless the water demand of the user.
The basic scheme of a line of pumping system capable of achieving this operation is as follows:

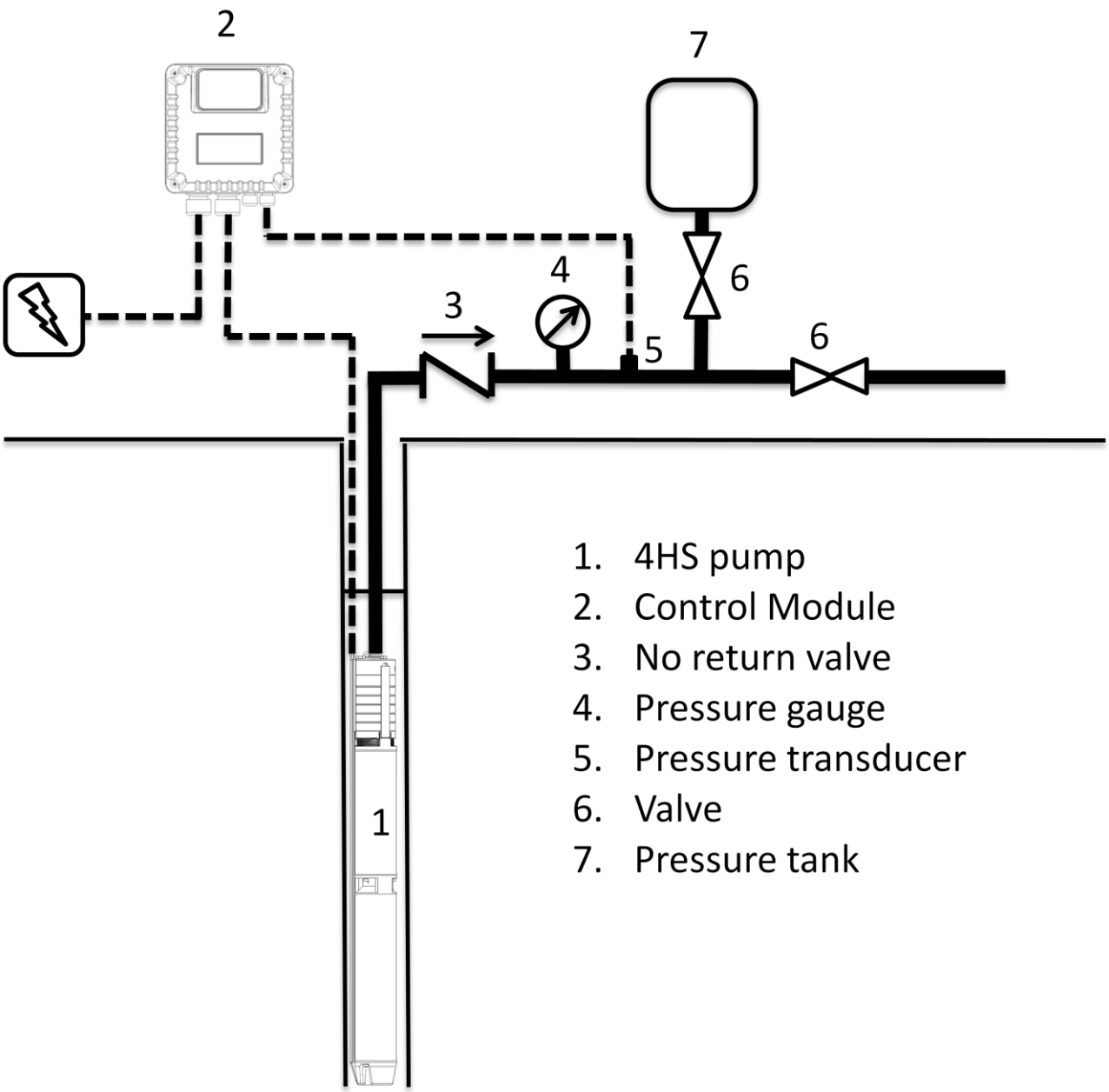

8.1 Pressure tank

Installation of a pressure tank in the hydraulic system is recommended to compensate leakage of water in the system (or during minimum water demand) and to avoid continuous start/stop cycling of the pump (check the appendix for more information).

Selecting the proper volume and pre-charge pressure of the tank is very important; smaller tank volumes will not compensate adequately for minimum water usage or leakage, while larger volumes make it more difficult for CM to control the pressure evenly.

Recommended tank volume is equal to the 10% of the maximum water flow of the system (expressed in volume unit/min)

Example: if the max water flow is 50 liters/min, the pressure tank should have a capacity of 5 liters
If the max water flow is 20 gpm, the pressure tank should have a capacity of 2 gallons

Pre-charge pressure of the pressure tank should be at least 1 bar (15 psi) less than the set-pressure of the system.

Example: if the set-pressure of the system is 4 bar, the pre-charge pressure of the tank should be 3 bar
If the set-pressure of the system is 60 psi, the pre-charge pressure of the tank should be 45 psi

8.2 Pressure sensor

It is possible to use pressure sensor with a linear output signal with range 4 – 20 mA.
Pressure transducer will be powered by any range of DC voltage including the value 24 V.
It is necessary to set the pressure sensor characteristics in the initial configuration menu or in the installer menu (please check the relevant chapter on setting parameters).

The connection of the pressure sensor is through the analog input terminals

0V (signal GND, if available) **+24V** (power supply 24 V dc) **AN1** (signal 4-20 mA)	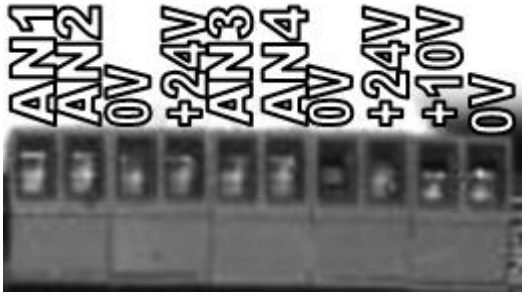

CM accepts the signal of an additional pressure transducer to be activated automatically if the first transducer fails; it is enough to connect the wires of the additional pressure transducer to pin AN2 (signal 4-20 mA) and +24V (power supply 24 V dc).

	To stabilize the pressure control operated by the CM module, it is suggested to put the pressure sensor near the well exit, after the check valve. **Pressure sensor and power cables can be close but it is suggested to use a shield cable connecting the shield to the sensor ground pin.**

8.3 Minimum stop frequency at 0 delivery (f min Q=0) during constant pressure control.

Minimum stop frequency is the minimum frequency value that, while maintaining the p_set, water delivery is zero. Below scheme graphically shows the function:

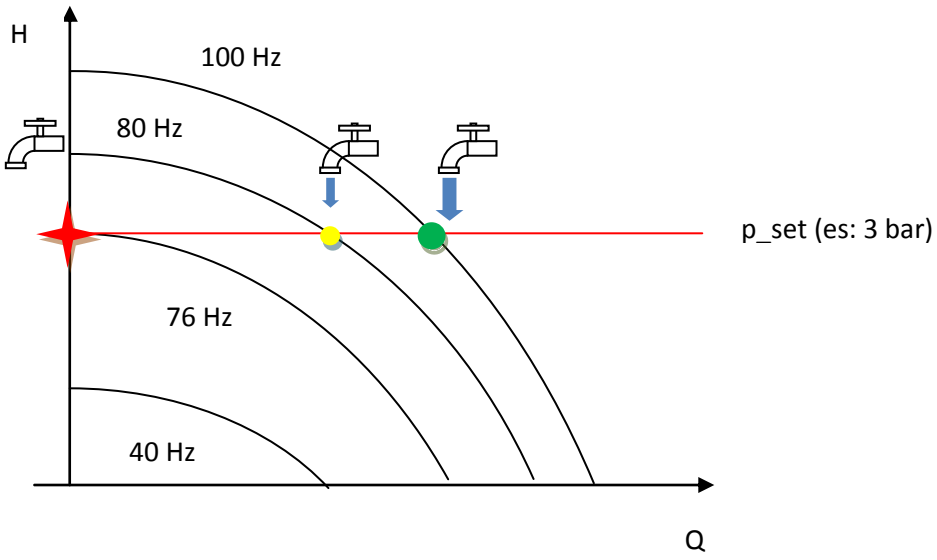

Progressively closing the water delivery valve reduces flow, causing CM to reduce the pump speed by reducing the output frequency, to maintain a constant pressure (i.e. 3 bar).
Once the water flow stops (output completely closed), pump will run at minimum frequency to maintain the set pressure.
Upon determining that the water requirement has stopped, CM stops the pump to save energy. Thus, the pump will be stopped when minimum frequency is reached.
Once the pump is stopped at min. frequency value, set pressure is maintained in the system.
To maintain the pressure on the pump output line, it is necessary to install a small pressure tank able to compensate for minor water leakage and to limit the number of pump restarts.
It is important to pinpoint that a particular set pressure corresponds to a single value of min. stop frequency.

	If the end user wants to change the set pressure, a new value of min. stop frequency should also be set.

9. 4HS pumps performance range

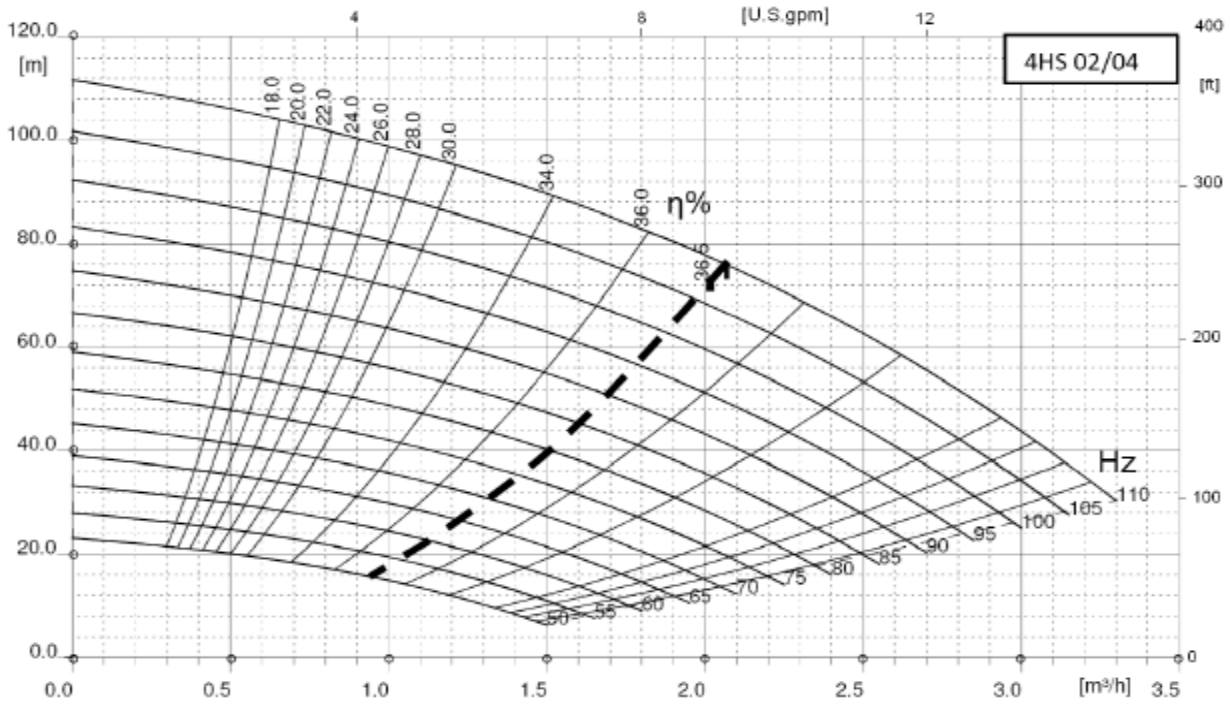

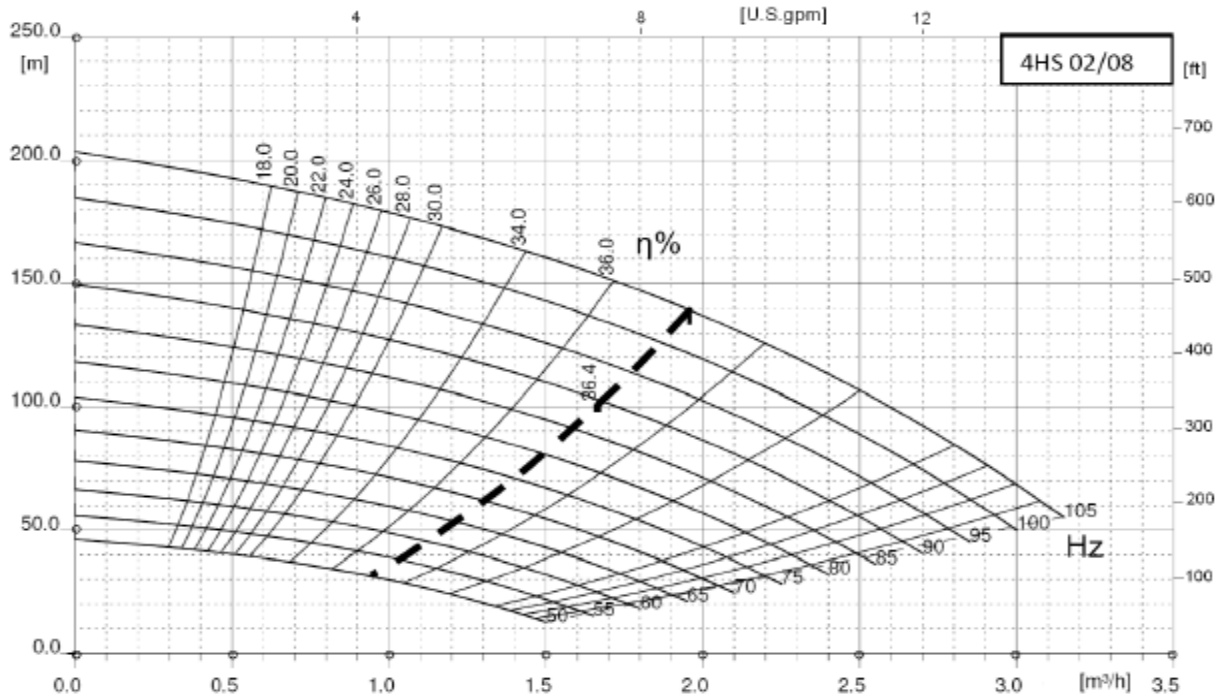

Model	m3/h	0,0	0,5	1,0	1,5	2,0	2,5	3,0	Packing Weight [kg]
	l/min	0,0	8,3	16,7	25,0	33,3	41,7	50,0	
	Hz	H [m]							
4HS - 02/04	50	23	20	15	7				
	60	34	30	24	16				
	70	46	42	36	28	16			
V in = 1x230V +/- 15%	80	60	56	48	40	28			22
50/60 Hz	90	75	70	64	56	44	28		
P1 max = 2.1 kW	100	96	88	80	72	60	44	25	
	110	112	105	98	90	78	64	45	
4HS - 02/08	50	45	40	30	12				
	60	66	60	50	32				
	70	90	82	70	55	30			
V in = 1x230V +/- 15%	80	120	110	97	80	55			25
50/60 Hz	90	150	140	128	110	86	55		
P1 max = 3.5 kW	100	185	172	160	142	120	90	50	
	105	205	190	180	160	135	105	70	
Packing dimensions = 139 x 22 x 16 cm (54,7 " x 8,7 " x 6,3")									

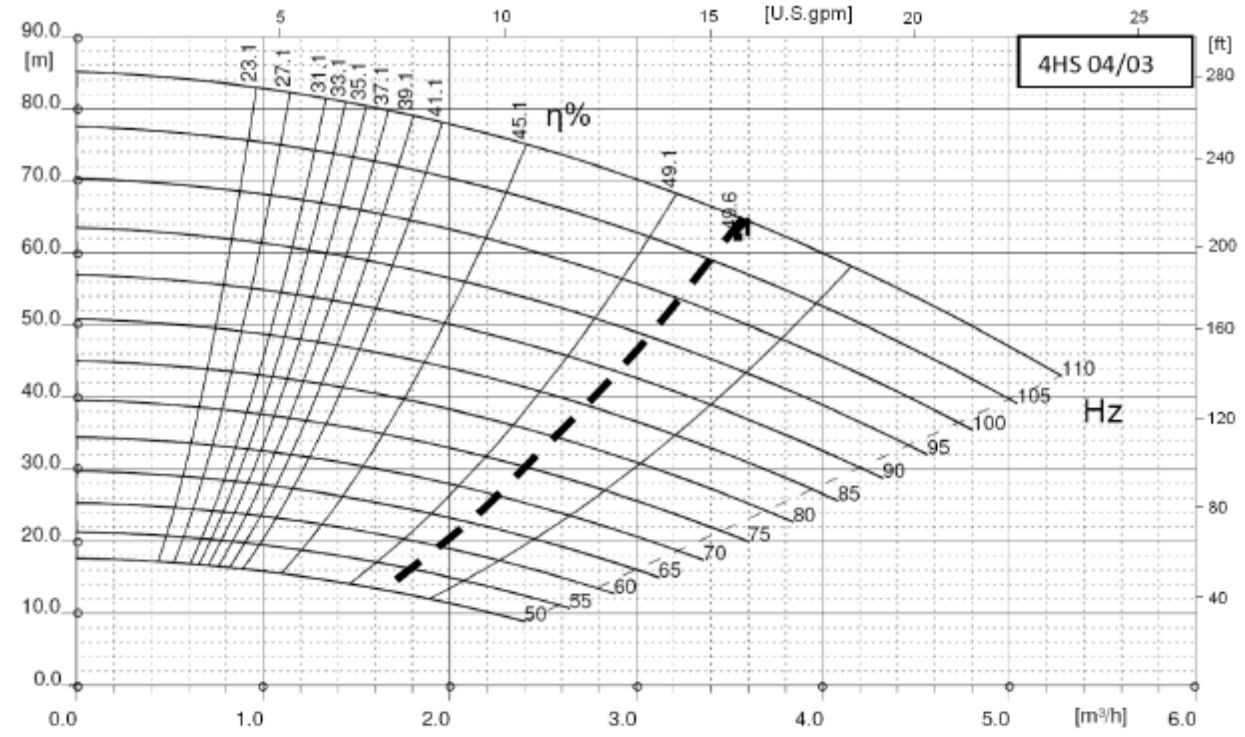

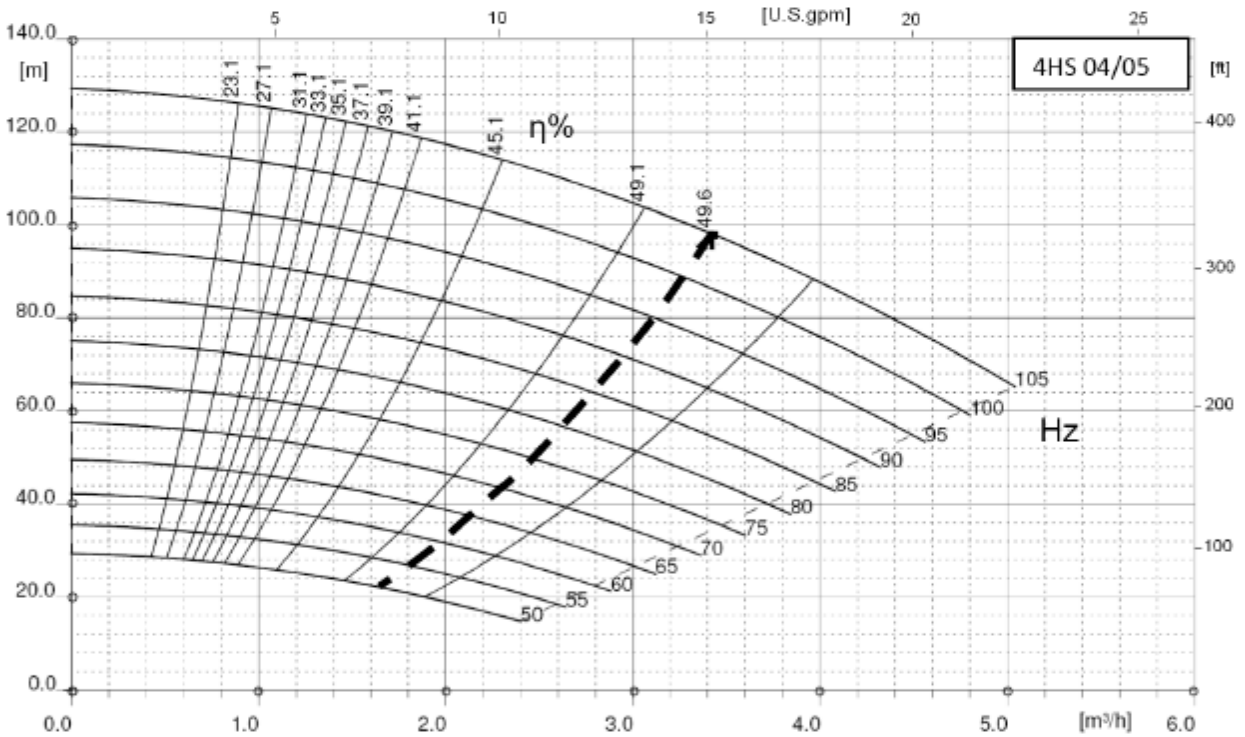

Model	m3/h	0,0	1,0	2,0	3,0	4,0	5,0	6,0	Packing Weight [kg]
	l/min	0,0	16,7	33,3	50,0	66,6	83,3	100,0	
	Hz	H [m]							
4HS - 04/03	50	18	16	12					
	60	26	24	19					
	70	34	33	28	21				
V in = 1x230V +/- 15%	80	45	43	38	31	20			22
50/60 Hz	90	58	55	50	42	32			
P1 max = 2.4 kW	100	70	68	64	56	46			
	110	85	83	78	70	60	47		
4HS - 04/05	50	30	26	19					
	60	42	40	32	20				
	70	58	54	47	34				
V in = 1x230V +/- 15%	80	76	72	64	52	36			24
50/60 Hz	90	95	92	84	72	54			
P1 max = 3.5 kW	100	118	114	106	92	76			
	105	130	126	118	104	88	66		
Packing dimensions = 139 x 22 x 16 cm (54,7 " x 8,7 " x 6,3")									

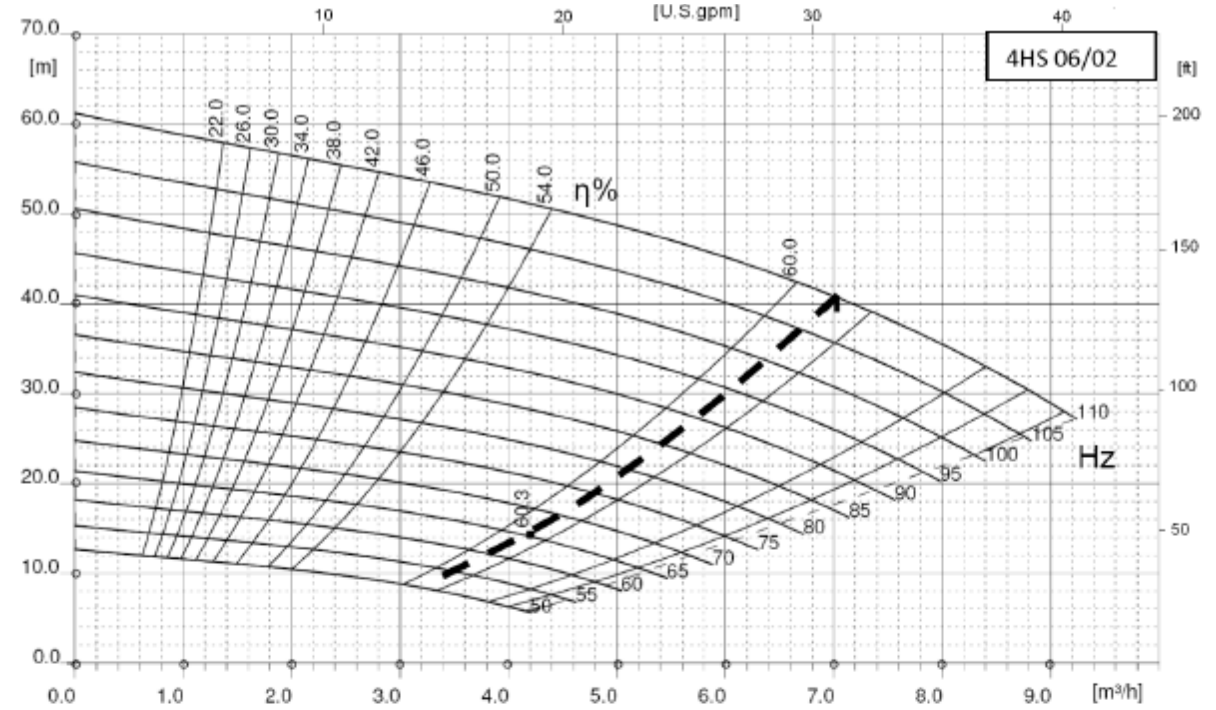

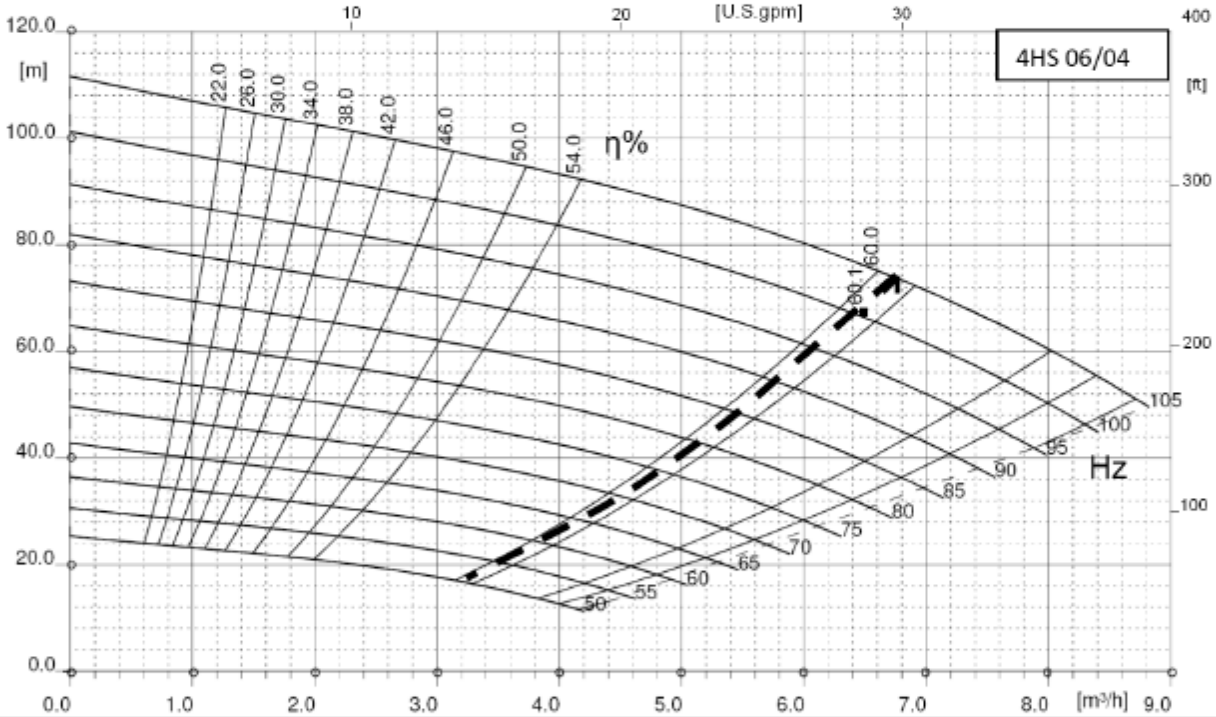

Model	m3/h	0,0	2,0	4,0	6,0	8,0	9,0		Packing Weight [kg]
	l/min	0,0	33,3	66,6	100,0	133,3	150,0		
	Hz	H [m]							
4HS - 06/02	50	12	10	6					
	60	18	16	12					
	70	25	22	18	10				
V in = 1x230V +/- 15%	80	32	29	25	18				22
50/60 Hz	90	41	37	33	26				
P1 max = 2.2 kW	100	50	46	42	35	25			
	110	61	56	52	45	36	29		
4HS - 06/04	50	23	21	12					
	60	36	32	24					
	70	50	44	36	20				
V in = 1x230V +/- 15%	80	66	58	50	36				24
50/60 Hz	90	82	74	66	52				
P1 max = 3.8 kW	100	102	92	84	72	50			
	105	112	104	92	80	60	48		
Packing dimensions = 139 x 22 x 16 cm (54,7 " x 8,7 " x 6,3")									

10. 4HS use and programming

CM software is extremely simple to use, but allows a wide variety of parameters to be set for ideal system calibration.
Setting Parameters are organized in 2 levels:

1: **Installer level**
A password is required for this level; these parameters are adjustable by trained professionals
Default password: **001**
From the menu a different password can be set up.

2. **Advanced level**
A second and different password is required; improper setting of these advanced parameters could compromise the integrity and the life of CM and pump;
Default password **002**
It is possible to set up a different password.

Installer and Advanced levels can be entered only with the correct password; otherwise, it is impossible to set up and/or modify any parameters (they can be only displayed).

10.1 Display

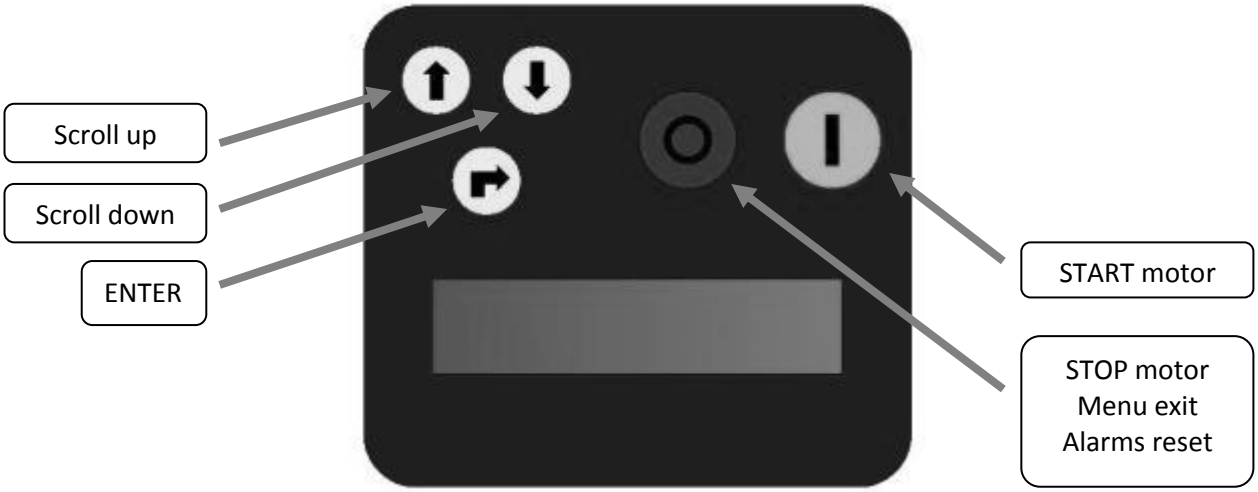

Screen is a back-lit LCD displaying 2 rows of 16 digits each. Alarms are indicated by an audible signal.

10.2 Initial setting

When the 4HS is switched on for the first time, the initial setting menu is displayed for the initial setting of parameters to configure pumps and plant characteristics.

If the initial setting procedure is not ended properly, it is impossible to run the pump.

Initial setting procedure can be repeated.

The CM software suggests default values for each parameter. If you wish to change the suggested value, press ENTER button, wait for the value blinks and act on the scroll keys. Press ENTER again to set the new value that will end to flash.

A detailed description of parameters of initial setting will follow:

parameter	default	description
Language Italiano / English	English	End user communication language.
Unit bar/psi	bar	Select Pressure unit.
Control mode: Constant pressure		
F.s. press. sensor 20mA = XXX.X [bar]	16	Set max pressure of pressure transducer; Set the pressure value of the transducer when output signal is 20 mA equivalent to the higher value of pressure range.
Offset sensors Press ENT for tuning		Zero point adjustment of the transducer (4mA) as offset compensation; automatically done by pressing Enter. If the transducer is not connected or wrongly connected the signal PRESS. SENSOR OFF is activated.
Max alarm pres. p = XX.X [bar]	10	It's the maximum pressure suitable in the system. If the pressure goes over an alarm occurs and pump is stopped. Pump is automatically restart if the pressure goes below the maximum value for time of at least 5 seconds.
Set pressure p = XX.X [bar]	3	It is the pressure value to be kept constant.
Auto restart ON/OFF	OFF	If ON is selected, after a lack of voltage, 4HS returns to its normal status; if 4HS was powering the pump before voltage drop, it returns to feed the pump without any kind of advise. Warning, read again the advice of the chapter 1.
INITIAL SET UP COMPLETED		Once the Setting procedure is completed you will get this indication on the display; set parameters are recorded by 4HS; these parameters can be singly set up in the INSTALLER Parameters menu or ADVANCED Parameters menu. If you with to reset to initial parameters use the DEFAULT Parameters menu.

10.3 Initial view

When powering the CM LCD display shows: model, release of digit display software (LCD =X.XX) and the release of inverter software (INV = X.XX) as shown below:

www.nastec.eu 4HS	www.nastec.eu LCD = X.XX	www.nastec.eu INV = X.XX

The following End User messages are displayed by pushing the scroll buttons:

Inv: ON/OFF Mot: ON/OFF p_m=XX.X [bar]	p_m is the pressure value read by the pressure transducer By pressing ENTER the pressure set value is displayed. Holding more than 5 seconds the ENTER button you can change the pressure set value.
Inv: ON/OFF Mot: ON/OFF f = XXX.X [Hz]	f value is the supply frequency to the motor; by pressing ENTER you can change the f value manually (word "set" is displayed) , pressing again ENTER you exit this set possibility (word "set" disappeared).
Inv: ON/OFF Mot: ON/OFF V_in=XXX [V] / I=XX.X [A]	V_in is the voltage supplied to the motor. This value is displayed only if motor is off; if motor is ON, I value appears , equivalent to the absorbed motor current.
Inv: ON/OFF Mot: ON/OFF cosphi = X.XX	cosphi index means the angle phi between the voltage and current absorbed by the motor.
Inv: ON/OFF Mot: ON/OFF P = XXXXX [W]	P is the power in W supplied to the pump.
Inv: ON/OFF Mot: ON/OFF STATUS:NORMAL/ALARM Inverter Life xxxxx h : xx m Motor Life xxxxx h : xx m ALL. XXXXXXXXXXXXX XXXXXXX h : XX m	NORMAL status means no alarms. If an alarm occurs a message blinks on the display and an audible signal is activated. By pushing ENTER accesses: inverter lifetime, pump lifetime, alarm list. PUMP lifetime is increasing when pump is powered. To come back to previous views press ENTER.
Menu ENT to enter	Return to MENU list by pressing ENTER.

First row gives the 4HS status:

- **Inv:ON XXX.X Hz** CM is powered and feeding the 4HS showing its frequency.
- **Inv:ON Mot: OFF** CM is powered but 4HS is not running (i.e. motor/pump was stopped due to minimum frequency being reached).
- **Inv:OFF Mot: OFF** 4HS is not controlled.

10.4 Menu display

Pressing ENTER where you are in [MENU' / ENT to access] in initial display, the following MENUs are displayed:

MENU Instal. param.	Password required to enter (default 001)
MENU Advanced param.	Password required to enter (default 002)
MENU Retrieve Init. Set.	Installer password required to enter (default 001) It is possible to return to original default set parameters (Change Init. Set.)
MENU' Change Init. Set.	Password required to enter (default 002)

To exit the Menu level and return to INITIAL DISPLAY is enough to press STOP button

10.5 Installer parameters

Most of the installer parameters are already set up during the initial configuration (chapter 6.2 Settings). Through this menu is possible to change again the previous parameters or enable further parameters allowing a perfect calibration of the pumping system in relation to the plant.

parameter	default	desciption	Constant press.	Fix speed	Const.press.2val	Fix speed 2 val.	External speed	Constant temp.	Constant flow
Control mode • Constant press. • Fix speed • Const.press.2val • Fix speed 2 val. • External speed • Constant temp. • Const. flow	Const. press.	Mode of control: • Constant pressure: CM changes the speed of pump to keep the pressure constant, independent of water demand • Fixed frequency: CM feeds the pump a set frequency, so the speed of motor is kept constant. • Constant pressure control with two values; the two values are selected by opening or closing the digital input 2. • Fixed frequency control with two values to be selected by opening or closing the digital input 2. • External speed: control motor frequency by using analogical input 4-20 mA connected to input AN4. • Constant temp.: CM changes the speed of pump to keep the temperature constant. An analogical signal 4-20 mA coming from a temperature sensor must be connected to input AN3. • Constant flow: CM changes the speed of pump to keep the flow constant. An analogical signal 4-20 mA coming from a flow sensor must be connected to input AN3.							

parameter	default	desciption	Constant press.	Fix speed	Const.press.2val	Fix speed 2 val.	External speed	Constant temp.	Constant flow
Unit bar/psi	bar	Pressure unit	✓		✓				
Unit °C / °F	°C	Temperature unit						✓	
F.s. press.sensor 20mA = XX.X [bar]	16	Maximum pressure of pressure transducer; Set the pressure value of the transducer when output signal is 20 mA equivalent to the highest value of pressure range (i.e. 0 – 10 bars transducer range) 10 bars = 20 mA	✓	✓	✓	✓	✓		
F.s. temp.sensor 20mA = XXX.X [°C]	100	Full scale of the temperature sensor. From the plate data of the sensor can read the temperature at which the sensor provides output 20 mA.						✓	
Min temp. sensor 4mA = - XXX.X [°C]	0	Full scale of the temperature sensor. From the plate data of the sensor can read the temperature at which the sensor provides output 4 mA.						✓	
F.s. flow sensor 20mA = XXX.X [m3/h]	100	Full scale of the flow sensor. From the plate data of the sensor can read the flow at which the sensor provides output 20 mA.							✓
Offset sensors Press ENT		Zero point adjustment of the transducer (4mA) as offset compensation; automatically done by pressing Enter. If the transducer is not connected or connected improperly, the signal an alarm is activated when pressing ENTER.	✓	✓	✓	✓	✓		✓
Max alarm pres. p = XX.X [bar]	10	Maximum pressure allowed in the system. If the pressure goes over this value, an alarm occurs and the pump is stopped. Pump is automatically restarted if the pressure goes below the maximum value for a period of at least 5 seconds.	✓	✓	✓	✓	✓	✓	✓
Min alarm pres. p = XX.X [bar]	0	Minimum pressure allowed in the system. If the pressure goes lower than the set value, an alarm occurs and the pump is stopped. Pump is automatically restarted if the pressure goes higher than the minimum value for a period of at least 5 seconds. This parameter is particularly useful in the event a system pipe breaks. It is suggested to set a value higher than 0.	✓	✓	✓	✓	✓	✓	✓

parameter	default	desciption	Constant press.	Fix speed	Const.press.2val	Fix speed 2 val.	External speed	Constant temp.	Constant flow
Set pressure p = XX.X [bar]	3	The pressure value to be kept constant.	✓		✓				
p loss compens. p = XX.X [bar]	0	Pressure compensation at the maximum frequency for each pump. Acting on the green button you can reverse the sign.	✓		✓				
Set pressure 2 p = XX.X [bar]	3	The pressure value to be kept constant.			✓				
p loss compens. 2 p = XX.X [bar]	0	Pressure compensation at the maximum frequency for each pump. Acting on the green button you can reverse the sign.			✓				
Press. set update t = XX [s]	5	Time to update p set for losses compensation.	✓		✓				

To ensure proper operation of pressure control is recommended to place the sensor near the pump.
To compensate the pressure loss in the pipes (proportional to flow) it is possible to vary the pressure set in a linear relation with respect to frequency. If Q = 0, Set pressure is granted while at the max output frequency will be granted the *Set pressure + p loss compens.*

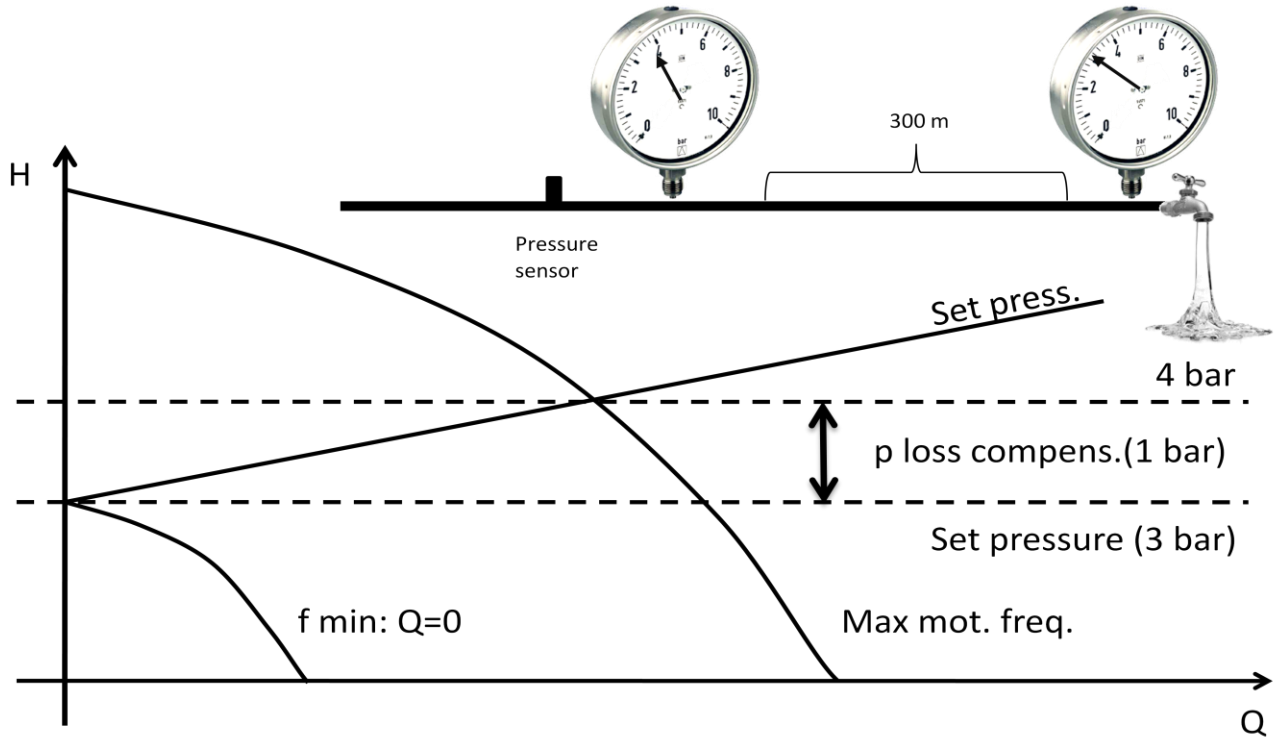

It can perform the following test to verify the correct value of p loss compensation:
1. install a pressure gauge away from the pressure sensor
2. open completely the valve
3. check the pressure gauge
--> Set the value of *p loss compens*. equal to the difference of the values from the two gauges.

parameter	default	desciption	Constant press.	Fix speed	Const.press.2val	Fix speed 2 val.	External speed	Constant temp.	Constant flow
Operating freq. f = XXX [Hz]	50	Set the frequency value (or the speed) to feed the pump.		✓		✓			
Operating freq. 2 f = XXX [Hz]	50	Set the frequency value (or the speed) to feed the pump.				✓			
Temperature set T = XXX.X [°C]	25	Temperature value to be maintained constant.						✓	
Flow set Q = XXX.X [m3/h]	10	Flow value to be maintained constant.							✓
Set f. min Q=0 fmin = XXX [Hz]	40	Minimum frequency at which the pump must stop.	✓		✓			✓	
Stop delay Q=0 t = XX [s]	5	Delay for which the pump will stop once the minimum frequency is reached (f min Q=0)	✓		✓			✓	
Ramp Q=0 t = XX [s]	20	Ramp time from freq min Q=0 to motor freq min. If, during this time, the p checked goes below the (p_set -delta start pres), CM powers the motor again; otherwise, CM will stop the pump following the min freq. of motor ramp.	✓		✓			✓	

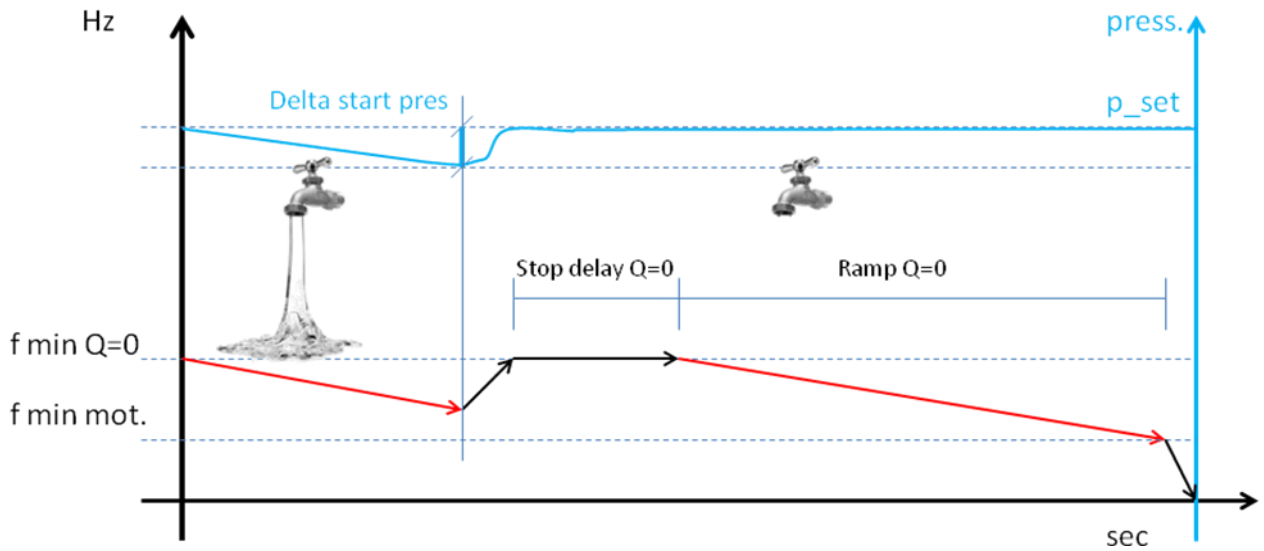

Delta start pres p = XX.X [bar]	0.3	This value represents the pressure drop below the set pressure required to start the pump.	✓		✓				

parameter	default	desciption	Constant press.	Fix speed	Const.press.2val	Fix speed 2 val.	External speed	Constant temp.	Constant flow
Delta stop press p = XX.X [bar]	0.5	It 's the increase of pressure respect to pressure set which must be passed so that there is a forced shutdown of the pump.	✓		✓				
Delta start temp. T = XXX.X [°C]	0.5	The common parameters than you should get the temperature above the temperature set so that the pump, arrested earlier, are restarted.						✓	
Delta stop temp. T = XXX.X [°C]	1	It 's the temperature rise compared to temperature set which must be passed so that there is a forced shutdown of the pump.						✓	
Ki XXX Kp XXX		Kp and Ki parameters allow the dynamic control of system by CM; set values (Ki=50, Kp=4) are usually enough to get a valid dynamic control; if the set pressure do not consent a valid control, proceed as follows; increase or reduce Ki while keeping Kp constant; if the problem persists, increase Kp value and increase or reduce the Ki value again till a good dynamic control is reached.	✓		✓			✓	✓
PI control Direct/Reverse	Direct	Direct: increasing misured pressure, CM decreases motor frequency. Inverse: increasing misured pressure, CM increase motor frequency.						✓	
Digital input 1 N.O. / N.C.	N.O.	By selecting N.A. (normally open) CM runs the motor if the digital input 1 is open; motor will be stopped if the digital input 1 is closed. By selecting N.C. (normally closed) CM runs the motor if the digital input 1 is closed; motor will be stopped if the digital input 1 is opened.	✓	✓	✓	✓	✓	✓	✓
Digital input 2 N.O. / N.C.	N.O.	By selecting N.A. (normally open) CM runs the motor if the digital input 2 is open; motor will be stopped if the digital input 2 is closed. By selecting N.C. (normally closed) CM runs the motor if the digital input 2 is closed; motor will be stopped if the digital input 2 is opened.	✓	✓	✓	✓	✓	✓	✓
Digital input 3 N.O. / N.C.	N.O.	By selecting N.A. (normally open) CM runs the motor if the digital input 3 is open; motor will be stopped if the digital input 3 is closed. By selecting N.C. (normally closed) CM runs the motor if the digital input 3 is closed; motor will be stopped if the digital input 3 is opened.	✓	✓	✓	✓	✓	✓	✓
Digital input 4 N.O. / N.C.	N.O.	By selecting N.A. (normally open) CM runs the motor if the digital input 4 is open; motor will be stopped if the digital input 4 is closed. By selecting N.C. (normally closed) CM runs the motor if the digital input 4 is closed; motor will be stopped if the digital input 4 is opened.	✓	✓	✓	✓	✓	✓	✓

parameter	default	desciption	Constant press.	Fix speed	Const.press.2val	Fix speed 2 val.	External speed	Constant temp.	Constant flow
Change PASSWORD1 ENT		Pressing ENT allows the installer level password (1st level) (default 001) to be changed.	✓	✓	✓	✓	✓	✓	✓

10.6 Advanced parameters

All the advanced parameters, due to their importance, are automatically set during initial setup. However, it is always possible to modify individual parameters or modify the password 2:

parameter	default	description
Rated motor Volt. V = XXX [V]	230	Motor rated voltage (as shown in the motor plate) Average voltage drop due to the inverter is between 20 V and 30 Vrms based on load condition, so when the input voltage is 230 V the average output voltage will be between 200 V and 210 Vrms.
Voltage boost V = XX [%]	1	Refers to the voltage increase during the start up of the motor.
Max motor Amp. I = XX.X [A]	12	Max current absorbed by the motor. This parameters allows the possibility to limit the current to the motor limiting as well the hydraulic performances.
Max motor freq. f = XXX [Hz]	110	Maximum frequency of the motor. Note: by reducing the maximum frequency of the motor, maximum current will be reduced as well.
Min motor freq. f = XXX [Hz]	40	Minimum frequency of the motor. Note: for 4HS pump is not advisable to set minimum frequency lower than 40 Hz in order to protect the integrity of the thrust bearings.
Ramp up time t = XX [sec]	5	Ramp-up time to reach the speed required to achieve the set pressure (or frequency value). Longer times delay the system reaching the pre set value but better protect system components. Excessively long ramp-up times can create difficulties in CM setup, and can also cause false overload alarms.
Ramp down time t = XX [sec]	5	Ramp-down time to reach zero speed. Longer times keep the system pressurized, while protecting the system components. Excessively long ramp-down times can create difficulties in CM setup. Excessively short ramp-down times can cause false overload alarms.

parameter	default	description
Ramp f min mot. t = XX [sec]	0.5	Time to reach the minimum frequency of the motor and vice versa. Note: it's important to keep this time less than one second.

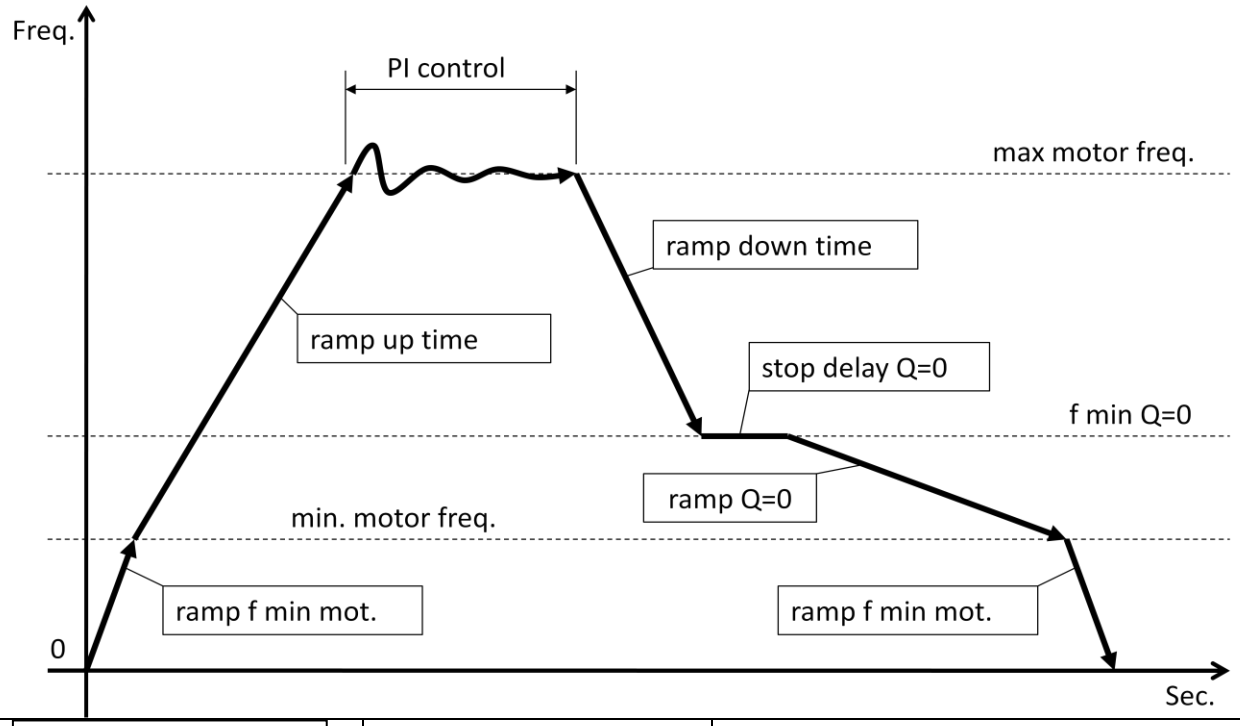

Dry run cosphi cosphi = X.XX	0.50	If the pump goes into dry-running, the cosphi reaches its lowest level. Typically the value 0.50 is sufficient to detect dry running pump 4HS.
PWM f = XX [kHz]	10	Carrier frequency (switching frequency). It is possible to chose PWM in the range of 2.5 ,4, 8, 10, 12 kHz .
V/f lin. --> quad. XXX %	50	This parameter allows you to change the V / f characteristic with which MINT feeds the engine. The linear characteristic corresponds to constant torque with variable speed. The quadratic characteristic is normally used with centrifugal pumps. The selection of torque characteristic should be done ensuring a smooth operation, a reduction of energy consumption and a lower level of heat and acoustic noise.

parameter	default	description
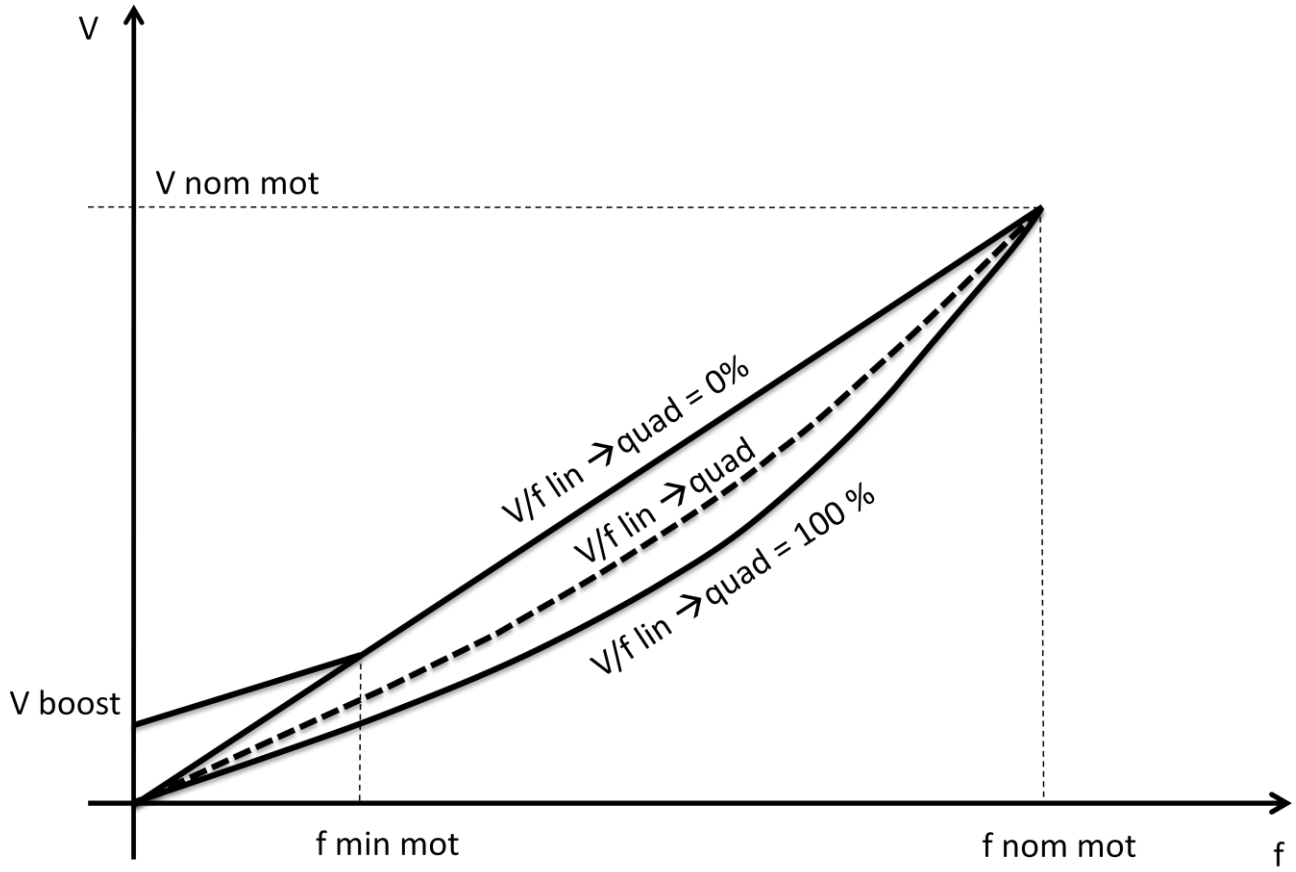		
Autorestart ON/OFF	OFF	If ON is selected, after a lack of voltage, 4HS returns to its normal status; if 4HS was powering the pump before voltage drop, it returns to feed the pump without any kind of advise. Warning, read again the advice of the chapter 1.
Change PASSWORD2 ENT		Pressing ENT allows the advanced level password (2st level) (default 002) to be changed.

11. Protections and alarms

Anytime a protection occurs a blinking message is displayed together an acoustic alarm; on STATUS on INITIAL VIEW the protection is displayed; by pressing STOP button (only and exclusively from the this position of STATUS on INITIAL VIEW) is possible to try to reset the alarm; if CM does not reset the alarm it is displayed again together an acoustic sound.

ALARM MESSAGE	ALARM DESCRIPTION	POSSIBLE SOLUTION
OVERCURRENT MOT.	Motor overload: input current of the motor is higher the rated motor current set as parameters	• Check other possible causes about the over current
UNDERVOLTAGE	Supply voltage too low	Check possible causes of undervoltage
OVERVOLTAGE	Supply voltage too high	Check possible causes of overvoltage
OVER TEMP. INV.	Inverter over temperature	• Make sure than ambient temperature is less than 35 °C
NO WATER (DRY RUN COSPHI)	Motor cosphi is lower than the set value of dry running cosphi	• Check if the pump is primed If pumps cosphi is lower than the set dry running cosphi for at least 2 seconds, CM stops the pump. CM tries to run the pumps every 10, 20, 40, 80, 160 minutes and then the pump is definitely stopped with NOWATER indication. <u>WARNING:</u> if dry running protection occurs, CM tries to start the pump automatically without any advice. Be sure to have cut power supply before to make maintenance.
PRESS. SENS. FAULT	Pressure sensor error	• Check the pressure transducer • Check the wiring of pressure transducer (signal into AN1 or AN2)
FLOW SENS. FAULT	Flow sensor error	• Check the flow transducer • Check the wiring of transducer (AN3)
TEMP. SENS. FAULT	Temperature sensor error	• Check the temperature transducer • Check the wiring of transducer (AN3)

ALARM MESSAGE	ALARM DESCRIPTION	POSSIBLE SOLUTION
OVER PRESSURE	Measured pressure value has reached the maximum pressure accepted by the system	• Make sure about the possible causes to reach the max pressure • Check the max pressure value set
UNDER PRESSURE	Measured pressure value has reached the lowest pressure accepted by the system	• Make sure about the possible causes to reach the min pressure (i.e. broken pipe) • Check the min pressure value set
OVERLOAD INV.	The current drawn by the load exceeds the capacity of inverter. CM is nevertheless able to continue to power the load for 10 minutes with an output current of 101% nominal one and for 1 minute with an output current of 110% nominal one	• Check the voltage drop along the supply cable to the motor • Check the line voltage • Reduce the max motor frequency value *(Installer parameter menu)* • Contact assistance
NO COMMUNICATION	Communication between pump and CM is interrupted	• Check the wiring connections • In the Status display (where the alarm NO COMMUNICATION is displayed) try to reset the alarm pushing STOP button
KEYBOARD FAULT	A button of keyboard is kept pressed for more than 30 seconds	• Make sure buttons are involuntarily pressed • Call service assistance
DIGITAL INPUT	Digital input contact opened /closed	Check the input digital configuration (under Installer Parameters menu , digital input 1 and digital input 2)

ALARM MESSAGE	ALARM DESCRIPTION	POSSIBLE SOLUTION
	If pumps cosphi is lower than the dry running cosphi for at least 2 seconds, CM stop the pump. 4HS try to run the pumps every 10, 20, 40, 80, 160 minutes and then the pump is definitely stopped. ATTENTION: if dry running protection occurs, CM try to start the pump automatically without any advice. Be sure to have cut power supply before to make maintenance. CM will stop the pump if the input motor current is higher than the set motor current for long time. By pressing START button is possible to run the pumps again. CM will stop the pump if the input voltage is higher than the set voltage for long time. By pressing START button is possible to run the pumps again. CM will stop the pump if the input voltage is lower than the set voltage for long time. By pressing START button is possible to run the pumps again.	

12. Trouble-shooting chart

LCD does not switch on after powering the CM	• Check the connecting flat cable between the LCD board (fixed to the cover) and the control board. • Check the fuses. • Check the feeding cable are properly connected (L1, L2, ground).
Power line of CM is interrupted by the differential protecting contactor	• Check the leakage current to ground of EMC filter. • following a rapid off/on operation the power supply differential contactor can interrupt again the power . After turning off the 4HS is therefore recommended to wait at least 1 minute before start the system.
When performing the Offset operation of the pressure device, SENS. PRESS. OFF alarm occurs	• check that the sensor cable is properly connected to the sensor device and CM. • Make sure that the sensor and its cable are no damaged. • Check that the range of pressure sensor is of 4 -20 mA type and the value of 15 V will be within its voltage feeding range.
Frequency and pressure oscillation on constant pressure control mode	• Check if the water tank and its air pressure are correct. In addition, it is suggested to increase the tank volume or reduce the pre-charge pressure. • Check the ki e kp parameters (*Installer Parameters menu*). At first, it is advisable to increase the Ki value. If it not enough, reduce of one unit the Kp value.
During constant pressure control, pump stops and starts continuously..	• Make sure that the value f min Q=0 (minimum frequency with Q=0) (Installer Parameters menu) is properly set up. Otherwise repeat the procedure. • Increase the value of parameter stop delay Q=0 *(Installer Parameter menu).* • Increase the value of “Ramp Q=0” parameter (*Installer Parameters menu*).
Measured pressure p_m drops too much before 4HS turning on the pump.	• Decrease the delta start pressure (*Installer Parameters menu*). • Decrease the delta start pressure (*Installer Parameters menu*). • Check if the water tank and its air pressure are correct. In addition it is suggested to increase the tank volume or reduce the pre-charge pressure. • Modify the value of ki e kp parameters (*Installer Parameters menu*). At first, it is advisable to reduce the Ki value. If it is not enough, increase of one unit the Kp value.

13. Technical Assistance

For more technical information contact the authorized reseller providing the following informations. Easier and faster will be the solution of the problem if full information will be provided.

4HS model 4HS - /	LCD version (shown when CM is power supplied) LCD = _.__	INV version (shown when CM is power supplied) INV = _.__
Line voltage: ___ [V]	Line Frequency: ☐ 50 Hz ☐ 60 Hz	
Description of the problem:		
Motor cable length [m]: _____	Motor cable section [mm2]:____	
Pressure tank volume: _____ [liter]	Precharge pressure : _____ [bar]	
Pressure sensor signal range (in accordance to the value reported on the sensor plate) 4 mA = ___ [bar] 20 mA = ___[bar]		
Used input digital & uses	Used digital output and uses	
electric and hydraulic scheme of the (better if explained pipes length and diameter , check valves and ball valves position, , pressure tank position, pressure sensor position, , main switches position, control boxes, etc.)		
Set parameters: please fill in the software scheme with the set parameters and attach the scheme to the email or send it to us by fax.		

DECLARATION OF CONFORMITY

In according with:

Machine Directive 2006/42/EC

EMC Directive 2004/108/CE

4HS 02/04, 02/08, 04/03, 04/05, 06/02, 06/04 conform to the following regulations:

EN 55011 Class A
EN 60335-1, EN60335-2-41

Vicenza, 06/09/2011

Ing. Marco Nassuato
Operation Manager

NOTE

Nastec srl, Via della Tecnica, 8, 36024, Mossano, Vicenza, Italy, Tel. +39 0444 886289, Fax +39 0444 776099, www.nastec.eu, info@nastec.eu