NASTEC

> we move it faster >

Bluetooth SMART

GET IT ON Google play

VSP solar pumps

Photovoltaic energy pumping systems

ENGLISH

VSP: Photovoltaic energy pumping systems

> we move it faster >

VSP_1_0_eng

09/2015

Nastec srl, Via della Tecnica, 8, 36024, Mossano, Vicenza, Italy,Tel. +39 0444 886289, Fax +39 0444 776099, info@nastec.eu, www.nastec.eu
Nastec reserves the right to modify without previous notice any technical information contained in this document.

Photovoltaic energy applied to pumping systems

The VSP systems are created to meet the widest variety of pumping applications bassed on photovoltaic energy.

The combination of VASCO Solar inverters (protection degree IP65 - NEMA 4) with the complete range of stainless steel submersible pumps from 4" to 10", give birth to a solution of absolute quality, unique for its reliability, variety and performance.

Whatever the demand for water, there is always a VSP system that can satisfy it.

The VSP systems find application in:

- Irrigation
- Livestock watering
- Pressurization

Pump speed is constantly adapted to available solar irradiation thus maximizing the amount of pumped water and making possible operation even in low irradiation conditions.

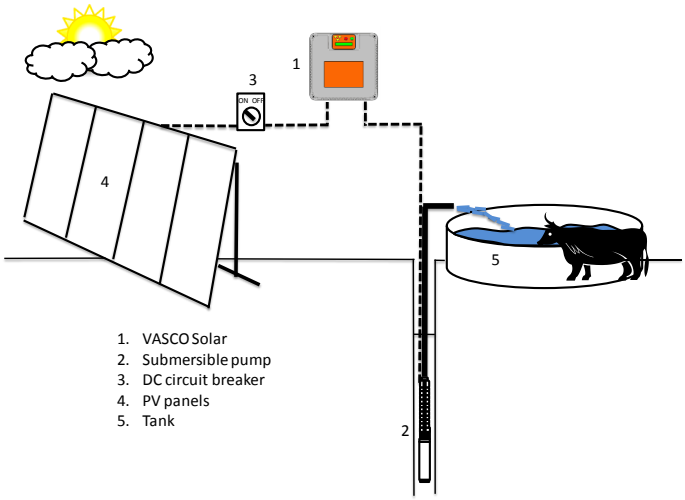

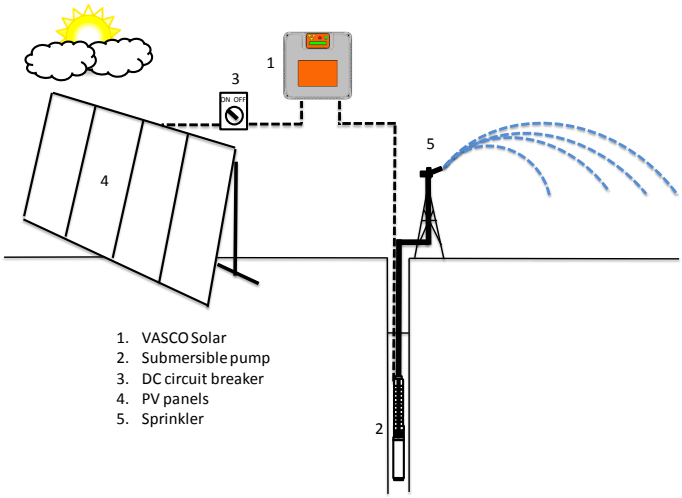

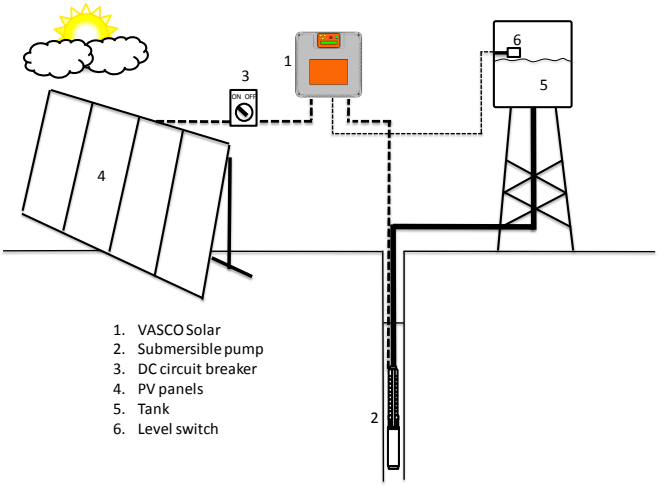

The inverter: VASCO Solar

VASCO Solar is able to convert DC voltage coming from photovoltaic panels into AC voltage for powering any pump driven by three phase asynchronous motor.

Pump speed is constantly adapted to available solar irradiation thus maximizing the amount of pumped water and making possible operation even in low irradiation conditions.

VASCO Solar also offers complete pump protection against over-voltage, over-current and dry running.

VASCO Solar is entirely built of aluminum to ensure maximum cooling and durability. Other metal parts are AISI 304 stainless steel made thus resistant to corrosion.

Two independent external fans and an internal fan provide perfect cooling. Their operation is adjusted according to actual thermal conditions thus extending life.

The membrane keyboard-cover protects the display from UV rays.

Model	Vin	Vin, P1 nom*	Max Vout	Max I out	Typical motor P2 **		Weight	Size
	[VDC]	[VDC]	[VAC]	[A]	[VAC]	[kW]	[kg]	
VASCO Solar 212	120 – 650	> 320	3 x 230	12	3 x 230	2,2	8,2	1
VASCO Solar 409	320 – 850	> 560	3 x 400	9	3 x 400	3	8,3	1
VASCO Solar 412	320 – 850	> 560	3 x 400	12	3 x 400	4	8,5	1
VASCO Solar 415	320 – 850	> 560	3 x 400	15	3 x 400	5,5	8,5	1
VASCO Solar 418	320 – 850	> 560	3 x 400	18	3 x 400	7,5	8,5	1
VASCO Solar 425	320 – 850	> 560	3 x 400	25	3 x 400	11	8,5	1
VASCO Solar 430	320 – 850	> 560	3 x 400	30	3 x 400	15	8,7	1
VASCO Solar 438	320 – 850	> 560	3 x 400	38	3 x 400	18,5	28	2
VASCO Solar 448	320 – 850	> 560	3 x 400	48	3 x 400	22	28	2
VASCO Solar 465	320 – 850	> 560	3 x 400	65	3 x 400	30	28	2
VASCO Solar 485	320 – 850	> 560	3 x 400	85	3 x 400	37	28	2

* Input voltage necessary to optain 100% of rated motor power.
** Typical motor power. It is recomended refer to rated motor current when selecting VASCO Solar model.

Electrical characteristics

- Ambient temperature: -10 - 50 ° C (14-122 ° F)
- Max altitude at rated load and temperature up to 1000 m
- Degree of protection: IP65 (SIZE 1), IP54 (SIZE 2)
- Output configurable digital N.A or N.C:
- Engine run signal
- Alarm signal
- Analog inputs, (10 or 15 Vdc):
  1. 4-20 mA
  2. 4-20 mA
  3. 4-20 mA / 0-10 VDC (configurable)
  4. 4-20 mA / 0-10 VDC (configurable)
- 4 digital inputs, configurable NO or NC, to start and stop engine
- RS485 serial

Mechanical characteristics

- Aluminium body, AISI 304 metal parts
- PA cable glands : 2 x M25 + 4 x M16 (SIZE 1)
- 2 x M40 + 6 x M16 (SIZE 2)
- PE keyboard membrane with UV protection

MPPT: always the maximum power available

In the application with photovoltaic panels MPPT (Maximum Power Point Tracking) maximizes, for various conditions of irradiation and temperature, the electrical power drawn from the panels so the amount of pumped water.

When the irradiation grows, the pump increases its rotation speed and so water flow increases.

When the irradiation decreases (passage of clouds or different times of the day), the pump reduces the frequency and thus the flow but continues to provide water until the irradiation does not fall below a minimum necessary to ensure the operation.

Multiple operation modes

VASCO Solar, apart from MPPT control, offers other several operation modes such as:

- Fix frequency operation with 1 or 2 reference values selectable via digital input.
- Operation by external frequency reference adjustable via analog input 4-20 mA or 0-10 VDC (trimmer).
- Operation at constant pressure with 1 or 2 reference values.

This last operation mode is particularly indicated in those plants where it' s preferred to store electrical energy in batteries and use it when it occurs.

To ensure maximum energy saving, and lengthen batteries file, it's useful to select constant pressure mode in which the pump speed, and so the power consumption, is varied while maintaining a constant desired pressure.

Parameters monitoring

VASCO Solar is equipped with a backlit alphanumeric display and it's designed to monitor key electrical parameters such as input voltage, power, current and motor power factor.

It's also possible to connect a pressure or flow sensor thus detecting provided performance.

In the diagnosis menu are recorded inverter and motor hours, operation statistics, and the last eight alarms occurred.

The programming menus are password-protected to prevent unwanted tampering.

Advanced connectivity

VASCO Solar allows to connect:

- An alarm signal
- A motor run/stop signal
- A pressure sensor or a flow sensor for performance monitoring
- Up to four digital inputs for pump start and stop (float switch, level sensors, etc ...)

Complete pump protection

VASCO Solar is able to protect the pump against overload and dry running.

In particular, dry running protection is performed by monitoring motor power factor and therefore use of probes is not required.

VASCO Solar also protects itself against over-voltage and over-temperature.

Easy installation

VASCO Solar can be fixed to the wall with included wall -kit. The integrated fans are easily replaceable in case of failure or maintenance.

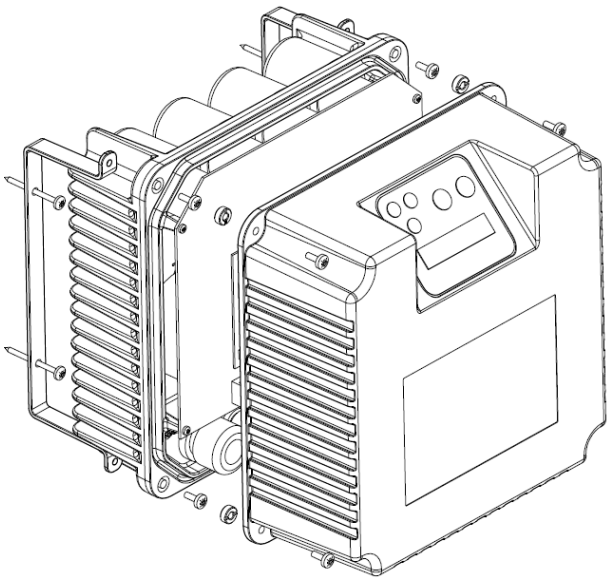

The pump

Centrifugal pump

- Complete range of 4”, 6”, 8”, 10” submersible pumps.
- Fully stainless steel AISI 304. AISI 316 available on request.
- Stainless steel impellers and diffusers to grant maximum efficiency and reliability.
- Maximum sand content: 50 gr/m^3

Submersible motor

- Three phase 4” and 6” water filled submersible motors.
- Encapsulated and resinated stator to grant maximum insulation and heat dissipation.
- Protection degree IP68.
- Insulation class B.
- Max water temperature: 30 °C, minimum speed 0,08 m/s
- Removable lead connector.
- Cable for drinking water applications, VDE/ACS/KTW compliant
- No-wear, water lubricated thrust bearing.
- AISI 316 version available on request.

Franklin Electric

Performance

The range of VSP pumps is composed of 14 different hydraulic stages with a nominal flow from 2 to 215 m^3/h. The number of stages varies according to the required head.

This combination generates more than 80 models of pumps (from 1,5 kW to 37 kW) able to satisfy the different water requirements.

The table shows the maximum performance attainable by each type of hydraulics with the maximum number of stages.

The selection of the most suitable pump for the application, with the correct number of stages, can be conducted through the special spreadsheet Solar Calculator available on website www.nastec.eu

For more information please contact our technical support service.

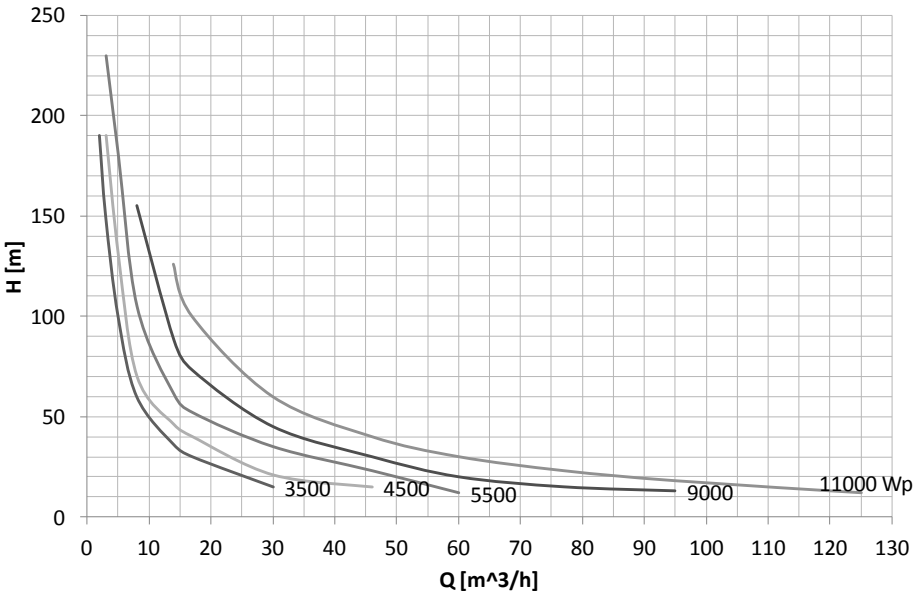

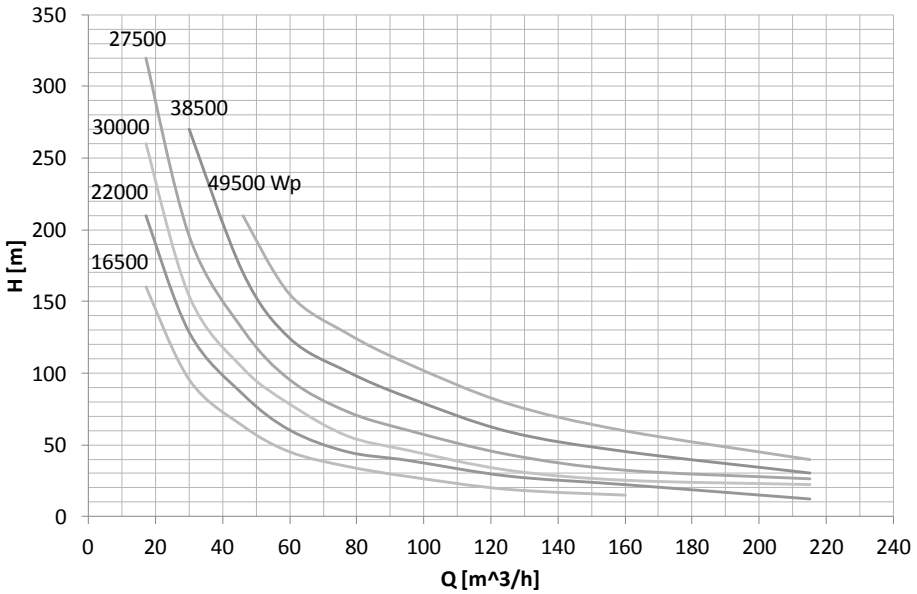

* Estimated PV power

Model	Max stages	Q [m^3/h]	H [m]
VSP 2	48	2	190
VSP 3	52	3	230
VSP 5	44	5	180
VSP 8	37	8	150
VSP 14	25	14	120
VSP 17	40	17	320
VSP 30	35	30	270
VSP 46	24	46	210
VSP 60	20	60	150
VSP 77	11	77	130
VSP 95	9	95	110
VSP 125	4	125	80
VSP 160	3	160	60
VSP 215	2-A	215	40

> we move it faster >

Nastec srl, Via della Tecnica, 8, 36024, Mossano, Vicenza, Italy,Tel. +39 0444 886289, Fax +39 0444 776099, info@nastec.eu, www.nastec.eu
Nastec reserves the right to modify without previous notice any technical information contained in this document.